HYBRID STEPPER MOTOR

TYPE : 60HS88-2808A08-D24

Step Angle	1.8° ± 5%	Phase No	4	Insulation Resistance	100MΩ (500VDC)	Insulation Class	B

Specifications

STEPPER MOTOR

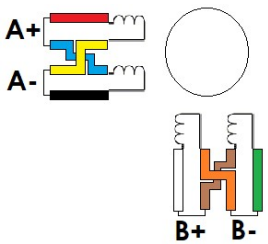

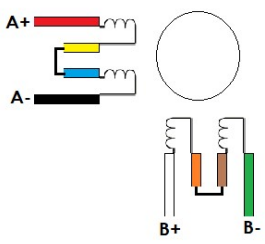

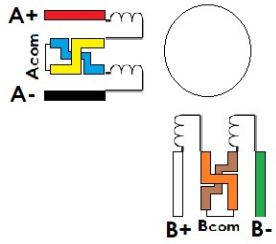

Connection Type	Parallel	Series	Unipolar
Holding Torque	3 Nm	3 Nm	2,2 Nm
Current	2,8 A	1,4 A	2,0 A
Resistance	1,6 ± 10% Ω	6,4 ± 10% Ω	3,2 ± 10% Ω
Inductance	7,0 ± 20%mH	28 ± 20%mH	7,0 ± 20%mH

Wiring Diagram

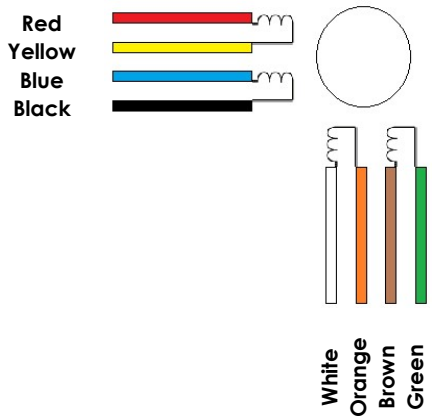
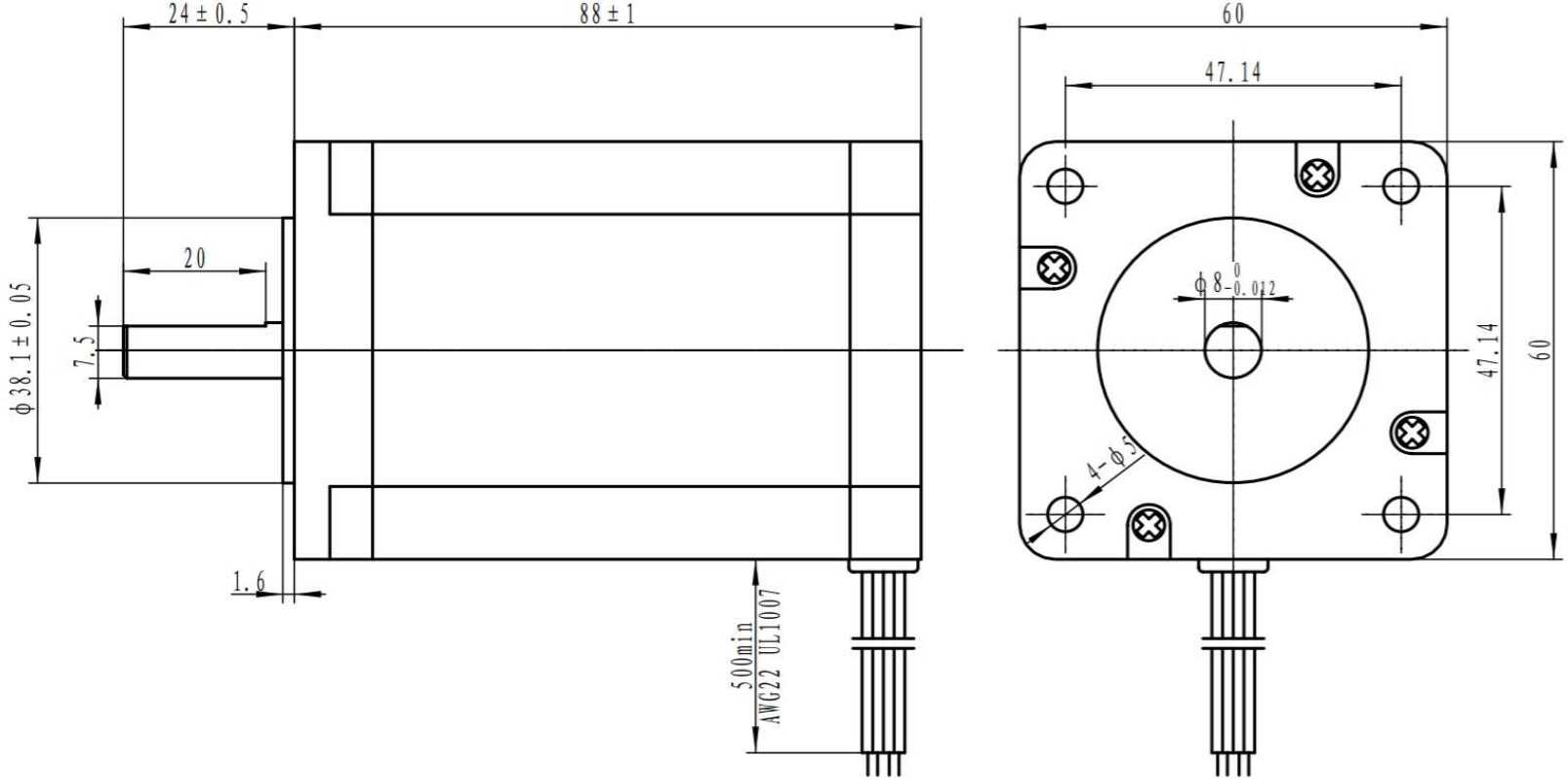
Dimentions (mm)